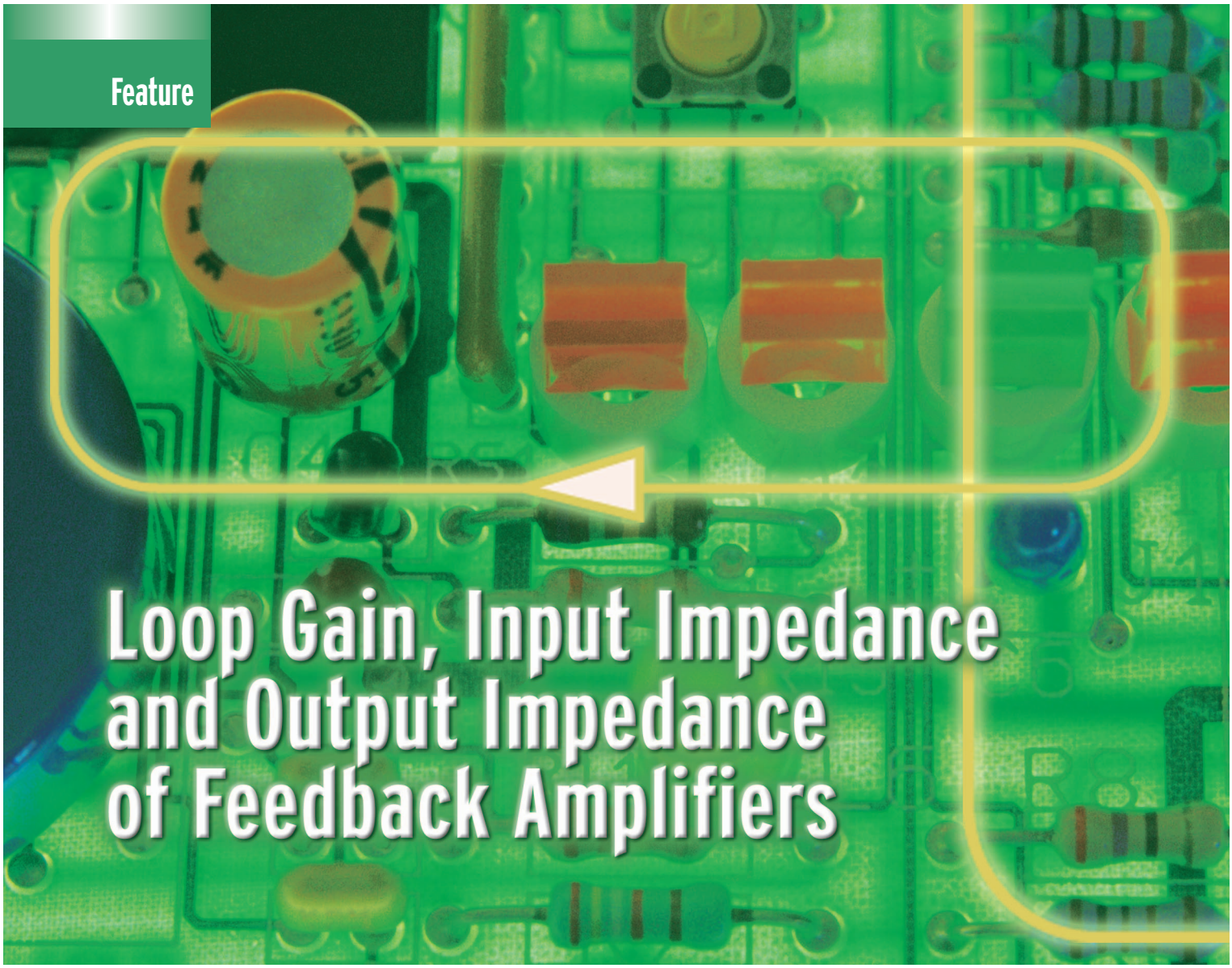

Feature

Loop Gain, Input Impedance and Output Impedance of Feedback Amplifiers

© PHOTODISC

Edward M. Cherry

Abstract

Introductory treatments of feedback amplifiers commonly contain inconsistencies, or present results as universal when in fact they need qualification. Loop gain, overall gain, input impedance and output impedance are instances. A case can therefore be made for rigorous development, even in a first course, provided mathematical rigor can be combined with physical insight.

A feedback factor H is first defined for ideal circumstances. The corresponding forward-path gain G has an obvious physical interpretation: the amplifier without feedback, the external source and load impedances, and the feedback network are all involved, and the form of G is such as to suggest best practice for the various feedback configurations. Stability considerations, and precise values for overall gain, sensitivity, input impedance and output impedance follow directly from GH.

Digital Object Identifier 10.1109/MCAS.2008.915509

I. Introduction

This paper addresses what the Author sees as a fault in the teaching of feedback amplifier theory.

The facts of gain, input impedance and output impedance, sensitivity and stability have been known for at least 60 years, but rigorous presentations such as Bode's [1] are hardly the stuff for an introductory course in feedback amplifiers. Typically† these begin with a block diagram along the lines of Fig. 1, and emphasize formulae that involve multiplying or dividing a parameter of the amplifier without feedback by unity-plus-loop-gain. In fact such formulae are almost never precise, and they can be wildly inaccurate. Therefore,

†Such treatments abound. References [2]–[4] are typical, and have enjoyed enduring popularity among students.

Authorized licensed use limited to: UNIVERSIDAD MAR DEL PLATA. Downloaded on December 15, 2008 at 10:28 from IEEE Xplore. Restrictions apply.

students who embark on a career as amplifier designers must un-learn much of what they were taught.

This paper presents an alternative approach which is both intuitive and precise. It also gives physical insight into the correct ways of using feedback—surely an important topic, although one that is rarely included in extant courses. The paper promotes a simple but almost-unknown method for input impedance and output impedance.

A. Block-Diagram Concepts

For Fig. 1 the *overall gain* A is

$$A \equiv \frac{\text{OUTPUT}}{\text{INPUT}} = \frac{G}{1+GH} = \frac{1}{H}\left[\frac{1}{1+1/GH}\right] \underset{GH \gg 1}{\Rightarrow} \frac{1}{H}. \tag{1}$$

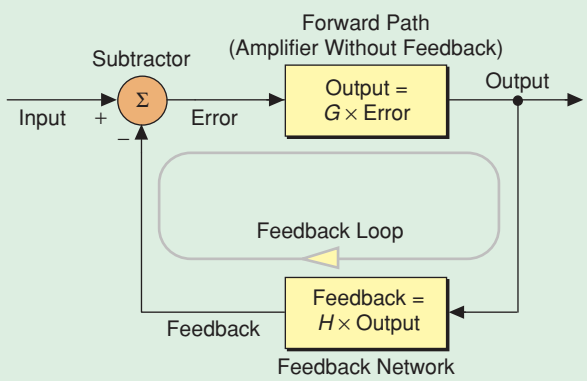

Figure 1. Block diagram of a generalized negative feedback system.

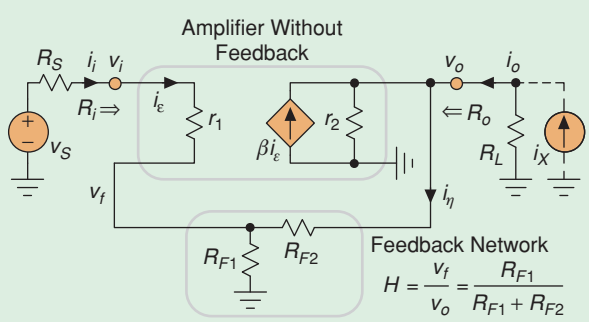

Figure 2. Voltage feedback applied around a real amplifier via a real feedback network.

Here G is the *forward-path gain*, H is the *feedback factor*, and GH is the *loop gain*. Physically, GH is the (negative of the) gain that would be measured by:

- setting the system input to zero;
- breaking the *feedback loop* (which comprises the forward path, feedback network and subtractor acting in cascade) at any point;
- inserting a test signal clockwise into the appropriate side of the break;
- observing the signal that comes back to the other side of the break.

If loop gain is large, overall gain approaches the reciprocal of the feedback factor and becomes independent of forward-path gain. Thus $1/H$ is the gain the system designer would like to achieve in ideal circumstances, and is called the *demanded gain*.

B. Real Feedback Amplifiers

The treatment then progresses to real systems in which both through and across variables (current and voltage in electrical instances) must be considered. Perhaps most usual is the voltage-feedback amplifier (Fig. 2) in which the feedback network takes the form of a resistive voltage divider:

$$H \equiv \frac{v_f}{v_o} = \frac{R_{F1}}{R_{F1}+R_{F2}}. \tag{2}$$

In the limit, therefore, from the second and third forms of (1),

$$A \equiv \frac{v_o}{v_s} = \frac{R_{F1}+R_{F2}}{R_{F1}}\left[\frac{1}{1+1/GH}\right] \underset{GH \gg 1}{\Rightarrow} \frac{R_{F1}+R_{F2}}{R_{F1}}. \tag{3}$$

The amplifier without feedback can be represented by any of the models in Fig. 3. These are simply Thévenin/Norton re-arrangements of each other, and are identically equivalent provided

$$\mu = g_m \times r_2,$$
$$\beta = g_m \times r_1,$$
$$r_m = g_m \times r_1 \times r_2.$$

Here

- g_m is the *mutual conductance* of the model, the ratio of its input voltage to the output current that would flow through a short-circuit external load. Note the subscript m. g_m is often confused with the transconductance, the ratio of input voltage to output current but with the load constraint removed.

E.M. Cherry is a consultant living in Marysville, Victoria 3779, Australia. He was formerly with Dept. E&CS Engineering, Monash University, Australia, and Maxim Integrated Products, Oregon, U.S.A. E-mail: dined@bigpond.com.

Authorized licensed use limited to: UNIVERSIDAD MAR DEL PLATA. Downloaded on December 15, 2008 at 10:28 from IEEE Xplore. Restrictions apply.

- μ is the *voltage amplification factor* of the model, the ratio of input voltage to the output voltage that would appear across an open-circuit external load. μ is often confused with voltage gain.
- β is the *current amplification factor*, the ratio of input current to the output current through a short-circuit external load, often confused with current gain.
- r_m is the *mutual resistance*, the ratio of input current to the output voltage across an open-circuit external load, often confused with transresistance.

Most common in introductory treatments is Fig. 3a. The model used in Fig. 2 is its dual (Fig. 3d); this actually leads to the easiest algebra, and highlights symmetries in the results.

Figure 2 includes an external load resistance R_L plus a load current generator i_X that is used only for finding the output resistance. For generality it also includes a Thévenin representation of the source, v_S and R_S, and overall gain is considered as the system gain v_o/v_S (see Sect. III.C below).

C. Output and Input Resistances

The resistance R_o looking back into the output terminals of Fig. 2 is measured by:

- setting v_S to zero,
- setting R_L to open-circuit,
- applying the test current i_X to the output terminal,
- measuring the resulting v_o.

Ideally it follows that

$$R_o = \frac{v_o}{i_X} = \frac{r_2}{1+GH}\,. \tag{4}$$

In the same way, the resistance R_i looking into the input terminals is

$$R_i = \frac{v_i}{i_i} = r_1(1+GH)\,. \tag{5}$$

D. Loading Effects

At some point in the discussion it is recognized that the amplifier without feedback is "loaded down" by the external load and feedback resistors, and that both the forward-path gain G and hence loop gain GH must include this effect. It is obvious too (although this is often omitted from introductory treatments) that the source resistance R_S affects the gain around the feedback loop.

Figure 4(a) shows how the gain around the loop can be written down easily and precisely by:

- setting the independent source v_S to zero (also i_X if this is included);
- cutting the loop at the output of the controlled current source $\beta\, i_\varepsilon$;
- injecting a test current clockwise into the cut;
- observing the resultant current that returns to the other side of the cut.

Because $\beta\, i_\varepsilon$ is an ideal current source, the value of i_{result} is unaffected by the circuit to which it is connected. After re-drawing the circuit as the 2-section current divider in Fig. 4(b), we have by inspection

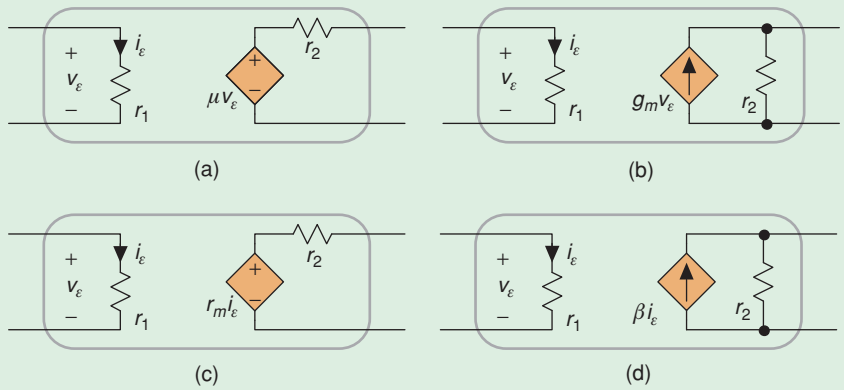

Figure 3. Equivalent models of any amplifier, using the Thévenin/Norton transformation.

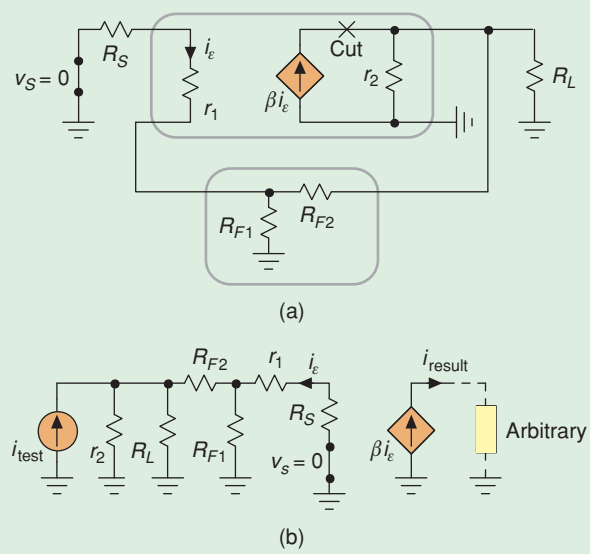

Figure 4. Measurement of gain around the feedback loop. (a) "In principle," including the location of the cut. (b) Re-drawn for easy calculation.

Authorized licensed use limited to: UNIVERSIDAD MAR DEL PLATA. Downloaded on December 15, 2008 at 10:28 from IEEE Xplore. Restrictions apply.

$$GH = (-)\frac{i_{\text{result}}}{i_{\text{test}}}$$

$$= \left[\frac{R_L \parallel r_2}{R_L \parallel r_2 + R_{F2} + R_{F1}\|(R_s + r_1)}\right] \times \left[\frac{R_{F1}}{R_S + r_1 + R_{F1}}\right]\beta\,. \tag{6}$$

The minus sign represents the subtractor which is present in the fundamental definition of loop gain.

II. The Fallacies of Simple Feedback Theory

Equation (6) is cause for concern on at least two accounts. In the first place the loop gain is not divisible by the feedback factor $R_{F1}/(R_{F1} + R_{F2})$, a fact that flies in the face of common-sense expectations. More importantly, it leads to disagreement with basic feedback principles: if there is one concept that designers of feedback amplifiers hold sacrosanct, it is surely (1). Thus:

The overall gain of Fig. 2 can be obtained by conventional circuit analysis, without reference to feedback concepts. Its equations (including i_X) can be written down using the principle of superposition as

$$[R_S + r_1 + R_{F1}\|R_{F2}]i_\varepsilon = v_s - \left[\frac{R_{F1}}{R_{F1} + R_{F2}}\right]v_o\,,$$

$$\left[\frac{1}{R_L \parallel r_2\|(R_{F1} + R_{F2})}\right]v_o = \left[\beta + \frac{R_{F1}}{R_{F1} + R_{F2}}\right]i_\varepsilon + i_X\,,$$

or in matrix form

$$\begin{bmatrix} R_S + r_1 + R_{F1}\|R_{F2} & R_{F1}/(R_{F1} + R_{F2}) \\ -\beta - R_{F1}/(R_{F1} + R_{F2}) & 1/\{R_L\|r_2\|(R_{F1} + R_{F2})\} \end{bmatrix} \times \begin{bmatrix} i_\varepsilon \\ v_o \end{bmatrix} = \begin{bmatrix} v_S \\ i_X \end{bmatrix} \tag{7}$$

from which the overall gain follows as

$$A = \left.\frac{v_o}{v_s}\right|_{i_X=0} = \frac{\Delta_{12}}{\Delta} = \frac{\beta + \frac{R_{F1}}{R_{F1}+R_{F2}}}{\frac{R_S+r_1+R_{F1}\|R_{F2}}{R_L \parallel r_2\|(R_{F1}+R_{F2})} + \left(\beta + \frac{R_{F1}}{R_{F1}+R_{F2}}\right)\left(\frac{R_{F1}}{R_{F1}+R_{F2}}\right)}\,. \tag{8}$$

Here Δ is the circuit determinant, and Δ_{12} is the cofactor obtained by striking out its 1st row and 2nd column. If the forward-path gain parameter $\beta \Rightarrow \infty$, then $A \Rightarrow (R_{F1} + R_{F2})/R_{F1}$ as expected.

Now substitute the known values of $1/H$ and A (2 and 8) into (1), and solve for loop gain:

$$GH = \left[\beta + \frac{R_{F1}}{R_{F1} + R_{F2}}\right]\left[\frac{R_L \parallel r_2\|(R_{F1} + R_{F2})}{R_S + r_1 + R_{F1}\|R_{F2}}\right] \times \left[\frac{R_{F1}}{R_{F1} + R_{F2}}\right]. \tag{9}$$

This is different from (6). Therefore, overall gain as predicted by substituting (2) and (6) into the fundamental feedback equation (1) would be just plain wrong.

That said, there are in fact many situations in which the numerical difference between (6) and (9) is small, sometimes very small indeed. Nevertheless, the existence of error of any kind in something so fundamental surely indicates a basic misunderstanding. And, in many situations the numerical difference between (6) and (9) is not small; notable instances occur routinely at high frequencies where the gain of the amplifier without feedback is dropping away and where reactive elements in the circuit must be considered.

A. Output Resistance and Input Resistance

The expectations from (4) and (5) are that the output and input resistances of Fig. 2 should be the corresponding resistances without feedback, divided or multiplied by unity-plus-loop-gain. A moment's reflection shows that both are patently absurd.

Note first that GH as given by either (6) or (9) includes both R_S and R_L. Therefore, irrespective of which expression is used, R_o (the Thévenin-equivalent resistance looking back into the amplifier from the load) as predicted by (4) depends on that load. In other words, (4) implies that the resistance looking into some port of a network depends on what is connected externally to that port! Similarly, (5) implies that R_i (the resistance looking into the amplifier from the source) depends on the Thévenin-equivalent resistance of that source.

The true values of R_o and R_i can be found from (7):

$$R_o = \left.\frac{v_o}{i_o}\right|_{v_S=0} = \left.\frac{v_o}{i_X}\right|_{\substack{v_S=0\\R_L=\infty}} = \left.\frac{\Delta_{22}}{\Delta}\right|_{R_L=\infty} = r_2 \parallel R_{F2}\left[\frac{(R_S + r_1)/(R_{F1}\|R_{F2}) + 1}{(R_S + r_1)/R_{F1} + \beta + 1)}\right] \tag{10}$$

$$R_i = \left.\frac{v_i}{i_i}\right|_{i_X=0} = \left.\frac{v_S}{i_\varepsilon}\right|_{\substack{i_X=0\\R_S=0}} = \left.\frac{\Delta}{\Delta_{11}}\right|_{R_S=0} = r_1 + R_{F1}\left[\frac{(R_{F2}/(R_L\|r_2) + \beta + 1}{(R_{F1} + R_{F2})/(R_L\|r_2) + 1}\right]. \tag{11}$$

Authorized licensed use limited to: UNIVERSIDAD MAR DEL PLATA. Downloaded on December 15, 2008 at 10:28 from IEEE Xplore. Restrictions apply.

There is a kind of duality between these expressions, but neither bears any obvious relation to some combination of loop gain (either 6 or 9) and the resistance without feedback. Rather, R_o is the parallel combination of r_2 with another resistance which does not involve r_2 explicitly, and R_i is the series combination of r_1 with a resistance which does not involve r_1.

B. Numerical Values

Introductory treatments commonly assert that a likely scenario for practical voltage-feedback amplifiers is:

- R_L dominates in a parallel combination with r_2 and $(R_{F1} + R_{F2})$, so that loading at the output by the feedback network is insignificant;
- r_1 dominates in a series combination with R_S and $R_{F1} \| R_{F2}$, so that loading at the input is insignificant;
- β is a large number whereas $R_{F1}/(R_{F1} + R_{F2})$ must be less than unity, so that leakage of signal forward via the feedback network is insignificant compared with transmission via the amplifier without feedback.

Figure 5 is a typical instance; its parameters might be $\beta = 2 \times 10^4$ (the current gain into a short-circuit load of two stages in cascade), $r_1 = 50\,\text{k}\Omega$ (the input resistance of a differential pair), and $r_2 = 100\,\text{k}\Omega$ (the collector resistance of a common-emitter transistor).

Table 1 compares the true values of relevant parameters with predictions from the common (but erroneous) formulae. Even though the common expression for loop gain happens in this instance to be correct to within 0.03%, output resistance is wrong by more than a factor 100. Numerical errors such as this last are not unusual. The Author finds it extraordinary that (4) and (5) continue to be printed in introductory texts, despite their obvious and gross failings.†

†To this list could be added the rule that distortion of an amplifier with feedback is equal to the distortion without feedback divided by $(1 + GH)$. It isn't! In the simplest possible case, an amplifier with a quadratic nonlinearity generates only 2nd-harmonic distortion. When feedback is applied, the nonlinearity becomes an infinite power series and all harmonics are generated (albeit at lesser amplitudes). Reference [5] gives an intuitive exposition.

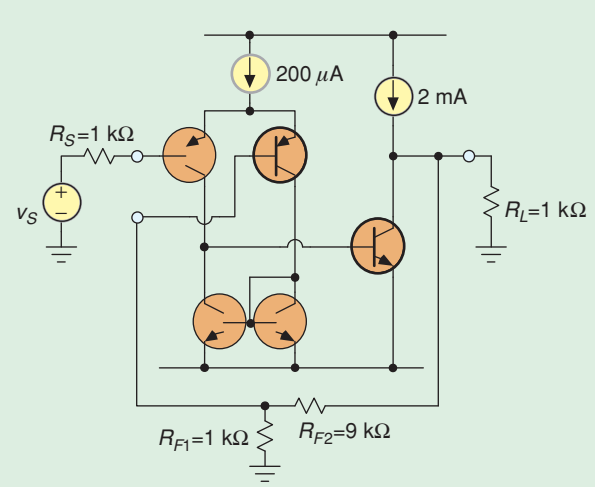

Figure 5. Simple common-emitter-output operational amplifier.

C. A Common Excuse

A few introductory treatments of feedback amplifiers attempt to explain away the errors in (4) and (5) by asserting that GH should be evaluated respectively with R_L open-circuited and R_S short-circuited. Evidently the approach outlined in Sect. I requires not one but at least three different interpretations of GH: a first that gives the overall gain correctly [we know from (9) what its value is, although we do not yet know its physical interpretation; we do know that it is not simply the gain around the loop, even including the loading effects], a second that applies in (4) [in fact neither (6) nor (9) does apply, even with $R_L \Rightarrow \infty$], and a third for (5) [similar comment]. And, there must be at least a fourth: the one to which Nyquist's stability criterion applies [it cannot be (6) because this does not predict overall gain correctly; it cannot be either of the special cases with R_L and R_S being infinite or zero, because both R_L and R_S affect stability and must surely appear in any valid stability criterion].

Small wonder that students find feedback amplifiers a tough topic! Arguably, a rigorous but self-consistent approach would be better, even in a first course, provided mathematical rigor can be combined with physical insight.

Table 1.
Parameters of Fig. 5.

Parameter	True	Ref Eqn	Erroneous	Ref Eqn	Error
Demanded gain $1/H$	10.00	(3)	–	–	
Loop gain GH	34.72	(9)	34.71	(6)	−0.03%
Input resistance R_i	1.85 MΩ	(11)	1.79 MΩ	(5)	−3%
Output resistance R_o	25.9 Ω	(10)	2.80 kΩ	(4)	×108

Comparison of parameters for Fig. 5, substituting typical component values into the true and the common (but erroneous) formulae.

Authorized licensed use limited to: UNIVERSIDAD MAR DEL PLATA. Downloaded on December 15, 2008 at 10:28 from IEEE Xplore. Restrictions apply.

III. A Precise but Intuitive Approach

Equation (2) is the source of the problem. Representing the feedback network by a single equation takes no cognisance of the error current i_ε circulating in the input mesh or the current i_η at the output. Therefore, define an ideal feedback factor

$$H \equiv \left.\frac{v_f}{v_o}\right|_{\text{ideal}} = \frac{R_{F1}}{R_{F1}+R_{F2}}\,, \tag{12}$$

and then include all the loading in an effective forward path which is some modification of the amplifier without feedback:

$$G = \left.\frac{v_o}{v_S}\right|_{\substack{\text{feedback removed}\\ \text{loading included}}}\,. \tag{13}$$

This harks back to the basic (1) and Fig. 1, with v_S and v_o interpreted as INPUT and OUTPUT respectively.

A. *Intuitive Evaluation of* G

As shown in Fig. 6, there are three corrections to be made in evaluating G:

- Most obviously, the feedback network constitutes part of the load on the output port of the amplifier without feedback, and

$$\frac{v_o}{i_\gamma} = R_L \| r_2 \| [R_{F2} + (R_{F1} \| ?_1)]\,, \tag{14}$$

  where $?_1$ is some non-obvious factor which (presumably) involves R_S and r_1, perhaps their series combination.†
- In the input mesh, the source resistance and feedback network are in series with the input resistance of the amplifier without feedback. The circulating error current is

$$\frac{i_\varepsilon}{v_S} = \frac{1}{R_S + r_1 + R_{F1} \| (R_{F2} + ?_2)}\,, \tag{15}$$

  where $?_2$ is another non-obvious factor which (presumably) involves R_L and r_2, perhaps their parallel combination.
- Even if the amplifier without feedback were completely "dead", there would still be some output. Signal from the source would leak forward to the load via r_1 and R_{F2}. Represent this leakage by a current generator which is located in parallel with the controlled source inside the amplifier without feedback:

$$i_\lambda = ?_3 \times i_\varepsilon\,, \tag{16}$$

  where $?_3$ is yet another non-obvious factor, perhaps $R_{F1}/(R_{F1} + R_{F2} + R_L \| r_2)$.

Combining these terms, the forward-path gain can be written intuitively as

$$G = \left.\frac{v_o}{v_S}\right|_{\substack{\text{feedback removed}\\ \text{loading included}}} = \frac{i_\varepsilon}{v_S} \times \frac{i_\gamma + i_\lambda}{i_\varepsilon} \times \frac{v_o}{i_\gamma + i_\lambda}$$
$$= \left[\frac{1}{R_S + r_1 + R_{F1} \| (R_{F2} + ?_2)}\right](\beta + ?_3)$$
$$\times\, [R_L \| r_2 \| (R_{F2} + R_{F1} \| ?_1)]\,. \tag{17}$$

Overall gain A is then found by substituting (12) and (17) into (1).

At the outset it can be seen that the various "?" terms in (17) hardly make any difference to the overall gain of a useful feedback amplifier. To neglect these terms entirely is a very good approximation.

- Loop gain GH is normally large, so small changes in G hardly affect A. This, after all, is the whole purpose of employing feedback. Therefore, any approximation in an analytic expression for G becomes a higher-order approximation in A.
- The demanded gain is normally quite large, so $R_{F2} \gg R_{F1}$. Therefore $?_1$ and $?_2$ occur as modifications to the nondominant component in series or parallel combinations of resistances, where they hardly make any difference. At worst they are second-order corrections in G, and therefore third-order corrections in A.
- Similarly, $?_3$ is a small number if $R_{F2} \gg R_{F1}$, because most of the error current goes to ground through R_{F1} rather than forward to the output via R_{F2}. In comparison the current amplification factor β is a large number.

B. *Precise Evaluation of* G

Figure 7(a) is Fig. 2 re-drawn with the resistive voltage-divider feedback network replaced by its active 2-port

†An interesting classroom exercise is inviting the students to write down what they anticipate the precise values of the various "?" terms will be.

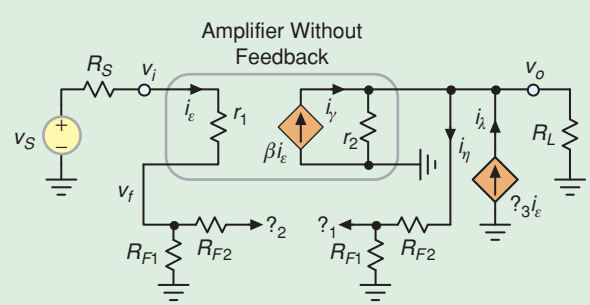

Figure 6. Figure 2 with the feedback removed, but the loading effects of the feedback network retained.

Authorized licensed use limited to: UNIVERSIDAD MAR DEL PLATA. Downloaded on December 15, 2008 at 10:28 from IEEE Xplore. Restrictions apply.

equivalent‡ Both the resistive divider and the 2-port are fully described by the same two equations:

$$v_f = i_\varepsilon (R_{F1} \parallel R_{F2}) + v_o \left(\frac{R_{F1}}{R_{F1} + R_{F2}} \right) , \tag{18}$$

$$i_\eta = -i_\varepsilon \left(\frac{R_{F1}}{R_{F1} + R_{F2}} \right) + v_o \left(\frac{1}{R_{F1} + R_{F2}} \right) . \tag{19}$$

The second term $v_o[R_{F1}/(R_{F1} + R_{F2})]$ on the RHS of (18) is the ideal feedback factor of (12), for which the feedback voltage depends only on the output voltage. The other terms in (18) and (19) correspond to the loading. The resistors and controlled source which these terms represent are in series or parallel with elements in the amplifier without feedback: $R_{F1} \| R_{F2}$ is in series with r_1, for example. Figure 7(b) is Fig. 7(a) with appropriate series and parallel elements combined and, by inspection, the forward-path gain associated with the ideal feedback network is

$$G \equiv \left. \frac{v_o}{v_S} \right|_{\substack{\text{feedback removed} \\ \text{loading included}}}$$

$$= \left[\frac{1}{R_S + r_1 + R_{F1} \| (R_{F2}} \right] \left[\beta + \frac{R_{F1}}{R_{F1} + R_{F2}} \right]$$

$$\times \left[R_L \| r_2 \| (R_{F2} + R_{F1}) \right] . \tag{20}$$

Evidently, including ?$_1$ and ?$_2$ in (17) was naïve, tantamount to a denial of the principle of superposition:

- v_f in Fig. 2 for given i_ε does indeed depend on R_L and r_2, but only insofar as these permit a finite v_o to exist. The contribution of v_o to v_f is the ideal feedback factor, and is already included in the equations. ?$_2$ is redundant.
- i_η does depend on R_S and r_1, but only insofar as these permit a finite i_ε to exist. The contribution of i_ε to i_η is already included as the forward leakage. ?$_1$ is redundant.
- And, because the forward-leakage generator is located directly in parallel with β (that is, the current gain into a short-circuit load), this leakage also must be evaluated for a short-circuit load and, by the principle of reciprocity, is equal to the ideal feedback factor.

C. Other Transfer Functions

The analysis in Section III.B is in terms of a kind of voltage gain from source to load, v_o/v_S. When the ordinary voltage gain v_o/v_i is required, this can be obtained easily by letting R_S in the analysis approach zero. Physically, v_S approaches v_i, and

$$\frac{v_o}{v_i} = \left. \frac{v_o}{v_S} \right|_{R_s = 0} = \frac{1}{H} \left[\frac{1}{1 + 1/GH} \right]_{R_s = 0} . \tag{21}$$

The reasons for including R_S in the analysis are twofold. Most practically, what a designer should be concerned with is the system amplification from source to output, v_o/v_S (but see Sect. VI below). Also, R_S affects the loop gain and therefore affects system stability; the system poles are the solutions of

$$GH(s) = -1 . \tag{22}$$

The loop gain in (21), which is involved in ordinary voltage gain and which has R_S set to zero, is not the loop gain that should be used in a Nyquist diagram or root-locus plot to determine system stability. Every designer must at some time have encountered an amplifier that is stable on the test bench but bursts into oscillation when connected to an injudicious source and/or load.

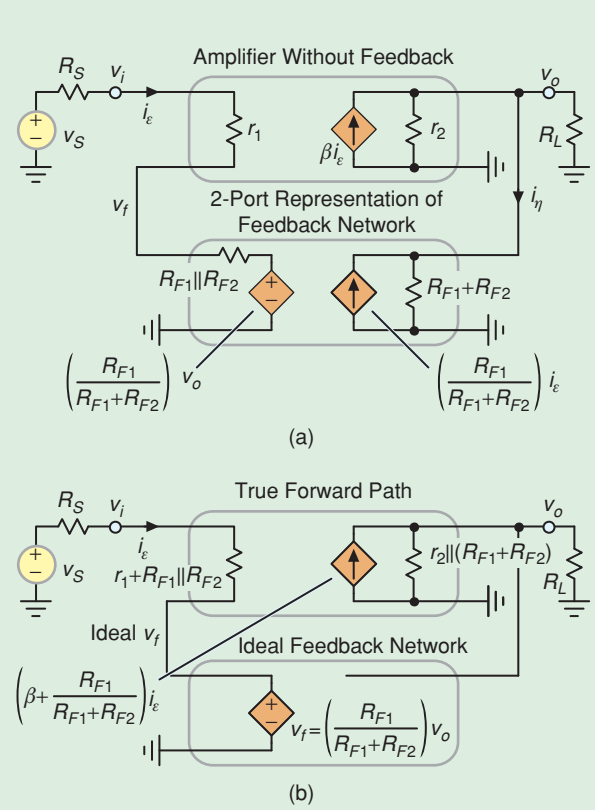

Figure 7. The voltage-feedback amplifier. (a) feedback network replaced by its 2-port equivalent; (b) "loading" elements in the feedback network absorbed into the amplifier without feedback, to give an ideal feedback network and the corresponding forward path.

‡The Author does not know where the precise representation of loading, as used here, was first proposed. References [6] and [7] are early instances whose Authors share a common background. Approximate methods can be found earlier, and still persist—for example [8].

Authorized licensed use limited to: UNIVERSIDAD MAR DEL PLATA. Downloaded on December 15, 2008 at 10:28 from IEEE Xplore. Restrictions apply.

D. Input Resistance [9]

Figure 8 illustrates the ordinary interpretation of input resistance for an amplifier. It is the resistance "looking into" the input terminals, and is the quotient of input voltage and current:

$$R_i = \frac{v_i}{i_i}.$$

In general, the value of R_i involves all parameters of the amplifier (including any feedback network), and it also involves the load R_L.

It is obvious from Fig. 8(b) that R_i is equal to the value of R_S for which v_i drops to half the value it would have had if R_S had been zero:

$$R_i = R_S|_{v_i = {}^1/_2 v_s}.$$

Because the voltage gain v_o/v_i of an amplifier is independent of the source from which it is fed, it follows that v_o also drops to half when $R_S = R_i$. Finally, therefore,

$$\left.\frac{v_o}{v_S}\right|_{R_S = R_i} = \frac{1}{2} \times \left.\frac{v_o}{v_S}\right|_{R_S = 0}. \tag{23}$$

Now substitute from (1) for a voltage-feedback amplifier:

$$\frac{1}{H}\left[\frac{1}{1 + 1/GH}\right]_{R_s = R_i} = \frac{1}{2} \times \frac{1}{H}\left[\frac{1}{1 + 1/GH}\right]_{R_s = 0}. \tag{24}$$

But, demanded gain $1/H$ is independent of source resistance, and may be cancelled throughout (24). Therefore, after some algebra,

$$\left.\frac{1}{GH}\right|_{R_S = R_i} = 1 + \left.\frac{2}{GH}\right|_{R_S = 0}. \tag{25}$$

In the case of a voltage-feedback amplifier, observe from (12) and (20) that loop gain is of the form

$$GH = \frac{R_B}{R_S + R_A} \tag{26}$$

where

$$R_A = r_1 + R_{F1} \parallel R_{F2},$$

$$R_B = \left[\beta + \frac{R_{F1}}{R_{F1} + R_{F2}}\right][R_L \parallel r_2 \parallel (R_{F1} + R_{F2})] \times \left[\frac{R_{F1}}{R_{F1} + R_{F2}}\right].$$

Substitution into (25) then yields

$$\frac{R_i + R_A}{R_B} = 1 + \frac{2R_A}{R_B}$$

which simplifies to

$$R_i = R_A + R_B \tag{27a}$$

$$= r_1 + R_{F1} \parallel R_{F2} + \left[\beta + \frac{R_{F1}}{R_{F1} + R_{F2}}\right] \times [R_L \parallel r_2 \parallel (R_{F1} + R_{F2})]\left[\frac{R_{F1}}{R_{F1} + R_{F2}}\right] \tag{27b}$$

(26) and (27a) constitute a precise method for calculating input resistance, directly from loop gain.

Evidently, the total input resistance of an amplifier with voltage feedback is equivalent to three components in series:

- the input resistance r_1 of the forward path;
- a direct contribution $R_{F1} \| R_{F2}$ from the feedback network;
- a term that involves both the current amplification factor β and the feedback factor $H = R_{F1}/(R_{F1} + R_{F2})$.

If loop gain is large, the third term dominates and R_i becomes large. This provides a physical interpretation of why R_S drops out of the ideal overall gain (3): as GH is increased, the input terminals of the amplifier behave more like an open circuit, and v_i approaches the Thévenin-equivalent voltage v_S within the source. Voltage-

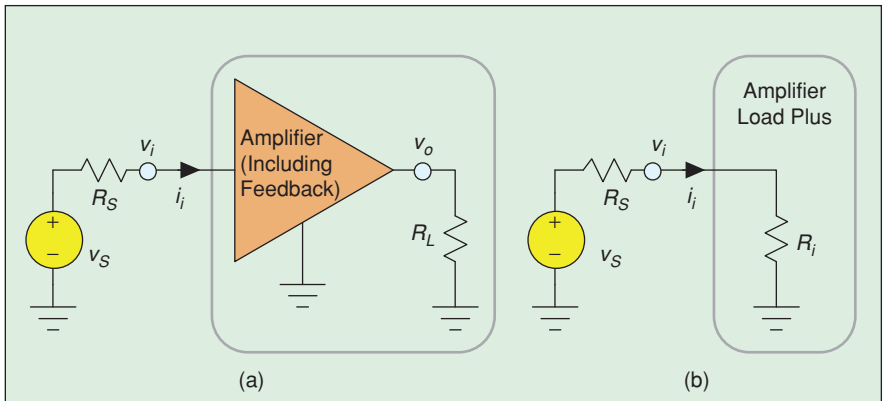

Figure 8. Interpretation of input resistance.

Authorized licensed use limited to: UNIVERSIDAD MAR DEL PLATA. Downloaded on December 15, 2008 at 10:28 from IEEE Xplore. Restrictions apply.

subtracting feedback at the input of an amplifier provides a means for identifying and amplifying the voltage generator inside a source.

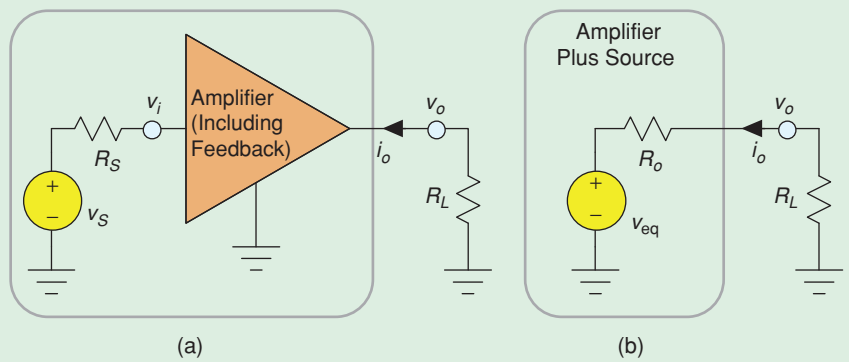

Figure 9. Interpretation of output resistance.

E. Output Resistance

Figure 9 illustrates the ordinary interpretation of output resistance for an amplifier. It is the Thévenin (or Norton) equivalent resistance "looking into" the output terminals from the external load. In general, the value of R_o involves all parameters of the amplifier (including any feedback network), and it also involves the source R_S.

It is obvious from Fig. 9(b) that R_o is equal to the value of R_L for which v_o drops to half the value it would have had if R_L had been infinite, and it follows that

$$\left.\frac{v_o}{v_S}\right|_{R_L=R_o} = \frac{1}{2} \times \left.\frac{v_o}{v_S}\right|_{R_L=\infty}. \tag{28}$$

Now substitute from (1) for a voltage-feedback amplifier:

$$\frac{1}{H}\left[\frac{1}{1+1/GH}\right]_{R_L=R_o} = \frac{1}{2} \times \frac{1}{H}\left[\frac{1}{1+1/GH}\right]_{R_L=\infty}, \tag{29}$$

from which

$$\left.\frac{1}{GH}\right|_{R_L=R_o} = 1 + \left.\frac{2}{GH}\right|_{R_L=\infty}. \tag{30}$$

In the case of a voltage-feedback amplifier, observe from (12) and (20) that loop gain is of the form

$$GH = \frac{G_Q}{1/R_L + G_P} \tag{31}$$

where

$$G_P = \frac{1}{r_2} + \frac{1}{R_{F1}+R_{F2}},$$

$$G_Q = \left[\frac{1}{R_S + r_1 + R_{F1} \parallel R_{F2}}\right]\left[\beta + \frac{R_{F1}}{R_{F1}+R_{F2}}\right] \times \left[\frac{R_{F1}}{R_{F1}+R_{F2}}\right].$$

Substitution into (30) then yields the output conductance as

$$G_o \equiv \frac{1}{R_o} = G_P + G_Q \tag{32a}$$

$$= \frac{1}{r_2} + \frac{1}{R_{F1}+R_{F2}} + \left[\frac{1}{R_S + r_1 + R_{F1} \parallel R_{F2}}\right] \times \left[\beta + \frac{R_{F1}}{R_{F1}+R_{F2}}\right]\left[\frac{R_{F1}}{R_{F1}+R_{F2}}\right] \tag{32b}$$

(31) and (32a) constitute a precise method for calculating output conductance, directly from loop gain.

Evidently, the total output conductance of an amplifier with voltage feedback is equivalent to three components in parallel:

- the output conductance $1/r_2$ of the forward path;
- a direct contribution $1/(R_{F1}+R_{F2})$ from the feedback network;
- a term that involves β and H.

If GH is large, the third term dominates and G_o becomes large. This provides a physical interpretation of why R_L drops out of the ideal overall gain (3): as GH is increased, the output terminals of the amplifier behave more like an ideal voltage source, and v_o becomes independent of the load. Voltage-sensing feedback at the output of an amplifier provides a means driving any arbitrary load with an unchanging voltage.

F. A Useful Approximation [10]

If approximate values for R_i and R_o are sufficient for some purpose, any reasonable approximation for G can be used. For example, the forward-leakage term can often be neglected. Here is an alternative:

In (24), GH is maximized by setting R_S to zero, and this maximum is usually a large number. $1/GH$ can be neglected on the right-hand side, and

Authorized licensed use limited to: UNIVERSIDAD MAR DEL PLATA. Downloaded on December 15, 2008 at 10:28 from IEEE Xplore. Restrictions apply.

$$\frac{1}{H}\left[\frac{1}{1+1/GH}\right]_{R_s=R_i} \approx \frac{1}{2}\times\frac{1}{H}$$

from which

$$GH|_{R_s=R_i} \approx 1\,. \tag{33}$$

Then, if GH is of the form given in (26), it follows that

$$R_i \approx -R_A + R_B \underset{GH\gg 1}{\Rightarrow} R_B\,. \tag{34}$$

Estimating the source resistance that would set the loop gain to unity provides a quick approximation to the input resistance of a feedback amplifier. And, this approximation differs from the precise result only in that the sign of the minor term is reversed.

In the same way (29) leads to

$$\frac{1}{H}\left[\frac{1}{1+1/GH}\right]_{G_L=G_o} \approx \frac{1}{2}\times\frac{1}{H}$$

from which

$$GH|_{G_L=G_o} \approx 1 \tag{35}$$

and, if GH is of the form of (31),

$$G_o \approx G_P + G_Q \underset{GH\gg 1}{\Rightarrow} G_Q\,. \tag{36}$$

Estimating the load conductance that would set the loop gain to unity provides a quick approximation to the output conductance of a feedback amplifier.

G. External Resistors

Practical voltage-feedback amplifiers often include resistors that are not within the feedback loop and do not fit into the model of Fig. 2. An example is the biasing resistor R_{ext} shown in Fig. 10. Such resistors can be dealt with via the following strategy:

- So far as the amplifier proper is concerned, the effective source involves the voltage divider formed by R_S and R_{ext}:

$$v_{S(\text{eff})} \Rightarrow v_S\left[\frac{R_{\text{ext}}}{R_S+R_{\text{ext}}}\right],$$

$$R_{S(\text{eff})} \Rightarrow R_S \parallel R_{\text{ext}}\,.$$

  These substitutions can be made in (12) and (20) to find the overall gain v_o/v_S.
- The effective input resistance of the complete amplifier, as seen by the source, is:

$$R_{i(\text{eff})} \Rightarrow R_{\text{ext}} \parallel R_i\,.$$

There are many obvious variations on this theme.

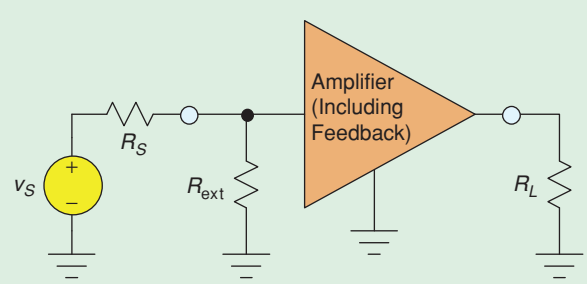

Figure 10. External resistor at the input of a feedback amplifier.

H. Sensitivity

The sensitivity of overall gain towards changes in an arbitrary forward-path parameter $(\cdot)$ is

$$S_A[\cdot] \equiv \frac{(\cdot)}{A}\times\frac{\partial A}{\partial(\cdot)} \equiv S_A[G]\times S_G[\cdot] = \frac{S_G[\cdot]}{1+GH}\,. \tag{37}$$

If G is written in the form

$$G = \frac{\text{numerator}}{\text{denominator}}\,,$$

it follows after some algebra that

$$S_A[\cdot] = \frac{1}{GH}\left\{\frac{[\text{numerator terms linear in}(\cdot)]}{[\text{whole numerator}]} - \frac{[\text{denominator terms linear in}(\cdot)]}{[\text{whole denominator}]}\right\}. \tag{38}$$

As an example, for Fig. 2 with G and H given by (12) and (20), the sensitivity of A towards changes in R_S is

$$S_A[R_S] \equiv \frac{R_S}{A}\times\frac{\partial A}{\partial R_S} = \frac{1}{1+GH} \times\left\{0-\frac{R_S}{R_S+r_1+R_{F1}\parallel R_2}\right\}.$$

As with R_o and R_i, any reasonable approximation for G may be used, and the assumption $GH \gg 1$ is likely to be valid. Thus for Fig. 2,

Authorized licensed use limited to: UNIVERSIDAD MAR DEL PLATA. Downloaded on December 15, 2008 at 10:28 from IEEE Xplore. Restrictions apply.

$$S_A[R_S] \approx -\left[\frac{R_S}{\beta[R_L \parallel r_2(R_{F1}+R_{F2})]}\right]\left[\frac{R_{F1}+R_{F2}}{R_{F1}}\right]$$

is likely to be a good approximation.

IV. A Summary of the Four Basic Structures

There are four basic ways in which feedback can be applied around an amplifier: all combinations of voltage-sensing or current-sensing at the output with voltage-subtracting or current-subtracting at the input. This section lists the transfer and driving-point functions for each.

Section III is couched in terms of resistive circuits because some students find these easier for an introductory presentation. However, resistance can be replaced by impedance or admittance, and the resulting equations are precise and general. Thus, if r_1 and r_2 are replaced by $z_1(s)$ and $z_2(s)$, and if $\beta(s)$ includes all the singularities of a multi-stage amplifier without feedback, the resulting $GH(s)$ is relevant to considerations of overall gain, input and output impedances, sensitivity and stability.

In the case of FET circuits, r_1 can be almost infinite but z_1 includes the gate-source capacitance and is strictly finite; $\beta(s)$ may include a pole close to the origin. All equations approach well-behaved limits at DC, as $|s| \Rightarrow 0$ and $r_1 \Rightarrow \infty$.

Both Z and Y are used freely in the following summary, to highlight the symmetry and duality of results equivalent to the whole of Sect. III. Expressions for input and output impedance are given in the basic form which emphasizes their physical basis and relation to G and H: most will simplify algebraically. For example, (58) appears to contain a term in Y_F^2 which originates from the product of the last two terms; in fact this cancels (as it must for a linear circuit) when the whole expression is set over a common denominator.

A. Voltage-Gain Feedback Amplifier $\mathbf{A_V}$

$$H \equiv \left.\frac{v_f}{v_o}\right|_{\text{ideal}} = \frac{R_{F1}}{R_{F1}+R_{F2}} \tag{39}$$

$$G \equiv \left.\frac{v_o}{v_S}\right|_{\substack{\text{feedback removed}\\ \text{loading retained}}} = \left[\frac{1}{Z_S+z_1+R_{F1}\|R_{F2}}\right] \times \left[\beta+\frac{R_{F1}}{R_{F1}+R_{F2}}\right] \times \left[\frac{1}{Y_L+y_2+1/(R_{F1}+R_{F2})}\right] \tag{40}$$

$$A \equiv \frac{v_o}{v_S} = \frac{R_{F1}+R_{F2}}{R_{F1}}\left[\frac{1}{1+1/GH}\right] \tag{41}$$

$$Z_i = z_i + R_{F1}\|R_{F2} + \left[\beta+\frac{R_{F1}}{R_{F1}+R_{F2}}\right] \times \left[\frac{1}{Y_L+y_2+1/(R_{F1}+R_{F2})}\right]\left[\frac{R_{F1}}{R_{F1}+R_{F2}}\right] \tag{42}$$

$$Y_o = y_2 + \frac{1}{R_{F1}+R_{F2}} + \left[\frac{1}{Z_S+z_1+R_{F1}\|R_{F2}}\right] \times \left[\beta+\frac{R_{F1}}{R_{F1}+R_{F2}}\right]\left[\frac{R_{F1}}{R_{F1}+R_{F2}}\right] \tag{43}$$

B. Current-Gain Feedback Amplifier $\mathbf{A_I}$

$$H \equiv \left.\frac{i_f}{i_o}\right|_{\text{ideal}} = \frac{-R_{F1}}{R_{F1}+R_{F2}} \tag{44}$$

$$G \equiv \left.\frac{i_o}{i_S}\right|_{\substack{\text{feedback removed}\\ \text{loading retained}}} = -\left[\frac{1}{Y_S+y_1+1/(R_{F1}+R_{F2})}\right] \times \left[\mu+\frac{R_{F1}}{R_{F1}+R_{F2}}\right] \times \left[\frac{1}{Z_L+z_2+R_{F1}\|R_{F2}}\right] \tag{45}$$

$$A \equiv \frac{i_o}{i_S} = -\frac{R_{F1}+R_{F2}}{R_{F1}}\left[\frac{1}{1+1/GH}\right] \tag{46}$$

$$Y_i = y_1 + \frac{1}{R_{F1}+R_{F2}} + \left[\mu+\frac{R_{F1}}{R_{F1}+R_{F2}}\right] \times \left[\frac{1}{Z_L+z_2+R_{F1}\|R_{F2}}\right]\left[\frac{R_{F1}}{R_{F1}+R_{F2}}\right] \tag{47}$$

$$Z_o = z_2 + R_{F1}\|R_{F2} + \left[\frac{1}{Y_S+y_1+1/(R_{F1}+R_{F2})}\right] \times \left[\mu+\frac{R_{F1}}{R_{F1}+R_{F2}}\right]\left[\frac{R_{F1}}{R_{F1}+R_{F2}}\right] \tag{48}$$

C. Transadmittance Feedback Amplifier $\mathbf{Y_T}$

$$H \equiv \left.\frac{v_f}{i_o}\right|_{\text{ideal}} = Z_F \tag{49}$$

Authorized licensed use limited to: UNIVERSIDAD MAR DEL PLATA. Downloaded on December 15, 2008 at 10:28 from IEEE Xplore. Restrictions apply.

$$G \equiv \left.\frac{i_o}{v_S}\right|_{\substack{\text{feedback removed}\\ \text{loading retained}}} = \left[\frac{1}{Z_S + z_1 + Z_F}\right][z_m - Z_F] \times \left[\frac{1}{Z_L + z_2 + Z_F)}\right] \tag{50}$$

$$A \equiv \frac{i_o}{v_S} = \frac{1}{Z_F}\left[\frac{1}{1 + 1/GH}\right] \tag{51}$$

$$Z_i = z_1 + Z_F + [z_m - Z_F]\left[\frac{1}{Z_L + z_2 + Z_F}\right][Z_F] \tag{52}$$

$$Z_o = z_2 + Z_F + \left[\frac{1}{Z_S + z_1 + Z_F}\right][z_m - Z_F][Z_F] \tag{53}$$

D. Transimpedance Feedback Amplifier Z_T

$$H \equiv \left.\frac{i_f}{v_o}\right|_{\text{ideal}} = -Y_F \tag{54}$$

$$G \equiv \left.\frac{v_o}{i_S}\right|_{\substack{\text{feedback removed}\\ \text{loading retained}}} = -\left[\frac{1}{Y_S + y_1 + Y_F}\right][y_m - Y_F] \times \left[\frac{1}{Y_L + y_2 + Y_F)}\right] \tag{55}$$

$$A \equiv \frac{v_o}{i_S} = -\frac{1}{Y_F}\left[\frac{1}{1 + 1/GH}\right] \tag{56}$$

$$Y_i = y_1 + Y_F + [y_m - Y_F]\left[\frac{1}{Y_L + y_2 + Y_F}\right][Y_F] \tag{57}$$

$$Y_o = y_2 + Y_F + \left[\frac{1}{Y_S + y_1 + Y_F}\right][y_m - Y_F][Y_F] \tag{58}$$

V. Further Insights

Consider an arbitrary 2-port network connected to a Thévenin source and Norton load as in Fig. 15. This configuration is chosen to match Figs. 2 and 11: any other is possible. For this configuration the 2-port is defined by one of its mixed-mode parameter sets (actually the *h*-parameters):

$$\begin{bmatrix} Z_S + z_{11} & a_{12} \\ b_{21} & Y_L + y_{22} \end{bmatrix}\begin{bmatrix} i_1 \\ v_2 \end{bmatrix} = \begin{bmatrix} v_S \\ i_X \end{bmatrix}. \tag{59}$$

Here z_{11} and y_{22} are impedance and admittance, a_{12} and b_{21} are voltage and current ratios respectively.

If i_X is set to zero, the network can be considered as a kind of amplifier, and its gain is

$$A \equiv \frac{v2}{v_S} = \frac{\Delta_{12}}{\Delta} = -\frac{b_{21}}{(Z_S + z_{11})(Y_L + y_{22}) - b_{21}a_{12}}$$

which can be algebraically manipulated into the form

$$A = \frac{1}{a_{12}} = \left[\frac{1}{1 - \frac{(Z_S + z_{11})(Y_L + y_{22})}{b_{21}a_{12}}}\right]. \tag{60}$$

This is of the same form as (1), with

$$G \Rightarrow -\frac{b_{21}}{(Z_S + z_{11})(Y_L + y_{22})}, \tag{61}$$

$$H \Rightarrow a_{12}. \tag{62}$$

Consider the implications for amplifier topologies that are not covered by Sect. IV:

1. Any linear 2-port for which the sub-12 element in its matrix is non-zero can be considered as a *feedback* amplifier.
2. a_{12} is in fact the ideal feedback factor of (39). It is the fraction of v_2 that subtracts from v_S in determining i_1:

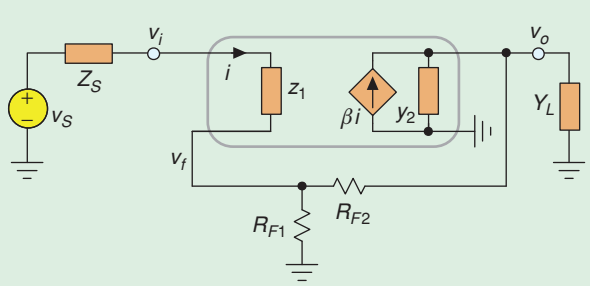

Figure 11. Voltage-gain feedback amplifier.

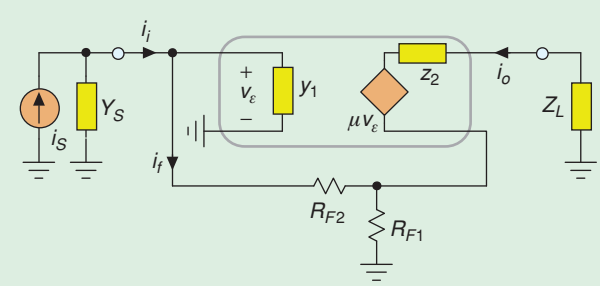

Figure 12. Current-gain feedback amplifier.

Authorized licensed use limited to: UNIVERSIDAD MAR DEL PLATA. Downloaded on December 15, 2008 at 10:28 from IEEE Xplore. Restrictions apply.

$$i_1 = \frac{v_S - a_{12}v_2}{Z_S + z_{11}}$$

We can therefore recognize i_1 as the error current.

3. z_{11} is the impedance looking into the 2-port when v_2 is set to zero (for example, by short-circuiting the load). It includes any "loading" by whatever feedback network is built into the 2-port, but note that this *loading at the input is evaluated as if the output were zero*. In Fig. 6 and (15), ?$_2$ must be zero.
4. Similarly, y_{22} is the admittance looking into the 2-port when i_1 is set to zero (for example, by open-circuiting the source). y_{22} includes any "loading" by whatever feedback network is built into the 2-port, but this *loading at the output is evaluated as if the error were zero*. In Fig. 6 and (14), ?$_1$ must be zero.
5. The gain parameter b_{21} is the ratio of i_1 to the output current into a short-circuit load—in other words it is the current amplification factor. Note that any *forward-leakage contribution via the inbuilt feedback network is evaluated as if the output were zero*.
6. The form of (61), with Z_S and Y_L in the denominator, guarantees that GH must be of the forms asserted in (26) and (31). Thus the method in Sects. III.D and III.E for Z_i and Y_o is universal. Specifically, for the topology of Fig. 11,

$$Z_A = Z_{11},$$

$$Z_B = -\frac{b_{21}a_{12}}{Y_L + y_{22}},$$

$$Y_P = y_{22},$$

$$Y_Q = -\frac{b_{21}a_{12}}{Z_S + z_{11}},$$

from which

$$Z_i = z_{11} - \frac{b_{21}a_{12}}{Y_L + y_{22}},$$

$$Y_o = y_{22} - \frac{b_{21}a_{12}}{Z_S + z_{11}}.$$

7. Nyquist's stability criterion is a method for checking the existence of roots of (22) in the right half of the complex frequency plane. Using (61) and (62), it is a method for checking

$$-\frac{a_{12}b_{21}}{(Z_S + z_{11})(Y_L + y_{22})} = -1,$$

that is,

$$(Z_S + z_{11})(Y_L + y_{22}) - a_{12}b_{21} = 0.$$

But the LHS is the circuit determinant $\Delta(s)$, and the solutions of $\Delta(s) = 0$ are of course the system poles. The discussion has come full circle.

A. Illustrative Example

Figure 16a shows the outline circuit for a FET voltage-feedback pair. This differs from the basic voltage-feedback structure in that the current flowing into the left-hand side of the feedback network is not the input current to the amplifier without feedback (which happens to be zero in the case of a FET); rather, it is the source (or drain) current of the first stage.

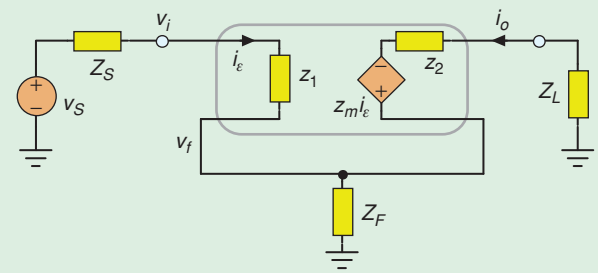

Figure 13. Transadmittance feedback amplifier.

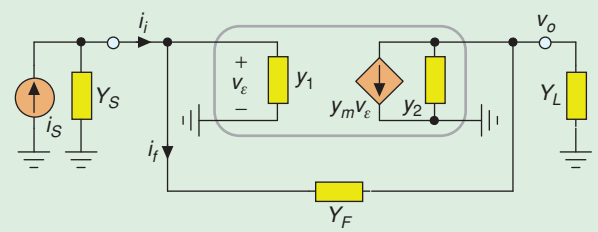

Figure 14. Transimpedance feedback amplifier.

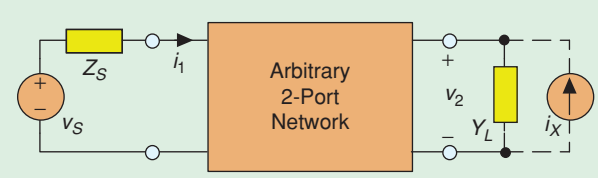

Figure 15. Arbitrary 2-port in a system.

Authorized licensed use limited to: UNIVERSIDAD MAR DEL PLATA. Downloaded on December 15, 2008 at 10:28 from IEEE Xplore. Restrictions apply.

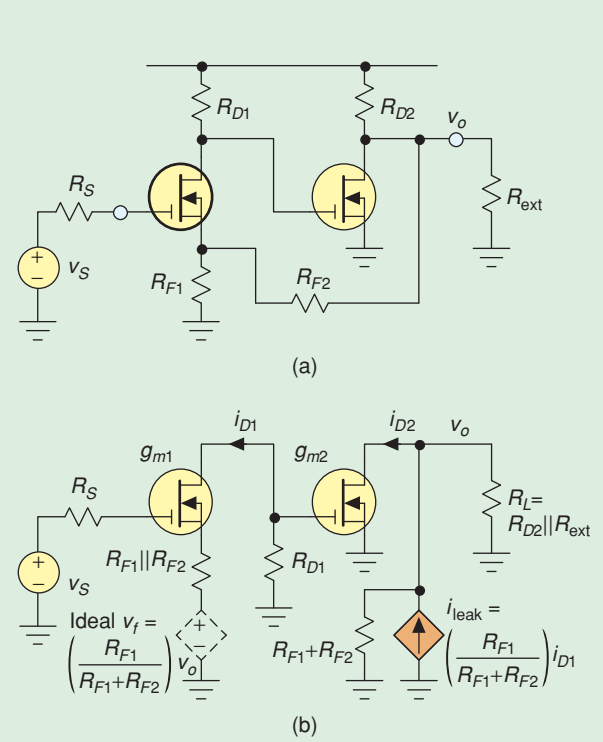

Figure 16. FET voltage-feedback pair. (a) Outline circuit. (b) Feedback removed but loading effects retained.

Figure 16b shows the circuit as re-arranged for finding the forward-path gain. The feedback is removed (the ideal generator is shown dashed) but the loading effects of the feedback network are retained:

- According to ¶3 above, loading at the input is evaluated as if the output were zero. R_{F1} and R_{F2} appear in parallel, and apply local feedback to the first stage.
- According to ¶4, loading at the output is evaluated as if the error were zero. R_{F1} and R_{F2} appear in series as a contribution to the load on the second stage.
- According to ¶5, forward leakage is evaluated as if the output were zero. R_{F1} and R_{F2} divide down the source current of the first stage.

Thus the forward-path gain is

$$G \equiv \left.\frac{v_o}{v_S}\right|_{\substack{\text{feedback removed}\\ \text{loading retained}}} = \left[\frac{i_{D1}}{v_S}\right]\left[\frac{i_{D2}-i_{\text{leak}}}{i_{D1}}\right]\left[\frac{v_o}{i_{D2}-i_{\text{leak}}}\right]$$
$$= \left[\frac{g_{m1}}{1+g_{m1}(R_{F1}\|R_{F2})}\right]\left[-R_{D1}g_{m2} - \frac{R_{F1}}{R_{F1}+R_{F2})}\right]$$
$$\times\left[\frac{-1}{1/R_L + 1/(R_{F1}+R_{F2})}\right], \qquad (63)$$

and the feedback factor is

$$H \equiv \left.\frac{v_f}{v_o}\right|_{\text{ideal}} = \frac{R_{F1}}{R_{F1}+R_{F2}}. \qquad (64)$$

The first [bracket] in (63) can be obtained by treating the first stage as a transadmittance feedback amplifier (Sect. IV.C above). For a FET with its infinite input resistance, the local forward-path gain is a limiting case of (50). Using Fig. 3,

$$\underset{z_m, z_1, z_2 \Rightarrow \infty}{\textbf{limit}} \left[\frac{1}{Z_S + z_1 + Z_F}\right][z_m - Z_F]$$
$$\times\left[\frac{1}{Z_L + z_2 + Z_F}\right] = y_m\,.$$

Hence

$$G_{\text{local}} = g_{m1}\,,$$
$$H_{\text{local}} = R_{F1}\,\|\,R_{F2}\,.$$

The output resistance of Fig. 16b follows from (63) and (64) as

$$\frac{1}{R_o} = \frac{1}{R_{F1}+R_{F2}} + \left[\frac{g_{m1}}{1+g_{m1}(R_{F1}\|R_{F2})}\right]$$
$$\times\left[R_{D1}\,g_{m2} + \frac{R_{F1}}{R_{F1}+R_{F2}}\right]\left[\frac{R_{F1}}{R_{F1}+R_{F2}}\right].$$

For Fig. 16a the total output resistance includes a contribution from R_{D2}—after the manner of Sect. III.G:

$$R_{o(\text{tot})} = R_o\,\|\,R_{D2}\,.$$

VI. Which Type of Feedback?

A. Sources and Loads [10]

The Thévenin and Norton theorems assert that a voltage generator in series with an impedance is equivalent to a current generator in parallel with the same impedance (usually expressed as admittance). Although mathematically correct, this gives a false impression of real-world transducers: only one of the generators is physically related to the transduction process.

For example, a photo-diode as used in optical fiber systems is a capacitive transducer for which the short-circuit (or Norton) current is directly related to the incident light intensity via the work function. The diode admittance is subject at low frequencies to the vagaries of diode leakage, and at high frequencies to the vagaries of depletion-layer and packaging capacitances. Thus

Authorized licensed use limited to: UNIVERSIDAD MAR DEL PLATA. Downloaded on December 15, 2008 at 10:28 from IEEE Xplore. Restrictions apply.

the Norton current is well defined, but the Thévenin voltage is not.

Conversely, an electret microphone is also a capacitive transducer, but in this case it is the open-circuit (or Thévenin) voltage that is directly related to incident sound pressure. The impedance and hence Norton current are subject to vagaries.

Feedback provides a means for identifying either one of the equivalent generators within a source. Amplifiers for use with Thévenin-type transducers should employ voltage-subtracting feedback at their input, amplifiers for Norton-type transducers should employ current-subtracting feedback. Thus, photodiodes usually work into Z_T amplifiers, whereas electret microphones have an in-built source-follower (a special case of the A_V amplifier).

In the same way some load transducers respond directly to the voltage across them, others to the current through them. A loudspeaker is an electromagnetic transducer for which output sound pressure depends on applied voltage (both voltage and pressure are across variables). Conversely, the force of an electro-mechanical actuator depends on applied current (current and force are through variables). At the output of an amplifier, voltage-sensing feedback or current-sensing feedback as appropriate can provide a well-defined drive to a particular type of load.

The first task in designing an amplifying system should be to identify the source and load transducer types.

B. Cascaded Amplifying Blocks

Similar considerations apply to the gain blocks within a multi-stage amplifier. The feedback type (voltage or current) at the output of one block should be the same as at the input of the following block.

- A_V and Z_T blocks employ voltage-sensing feedback at the output. Either should be followed by one of A_V or Y_T which employ voltage-subtracting feedback at the input.
- A_I and Y_T blocks employ current-sensing feedback at the output. Either should be followed by one of A_I or Z_T which employ current-subtracting feedback at the input.

Figure 17 shows the four possible configurations for a 3-stage voltage amplifier, for use between a Thévenin-type source and a voltage-responding load, with the relevant signal type at various points. Other source and load types require different and appropriate amplification.

If this procedure is followed, the output signal type from one block is processed directly by the following block. There is also a high degree of mutual help between blocks.

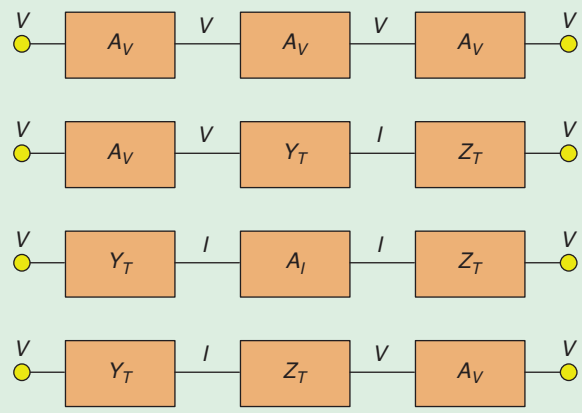

Figure 17. The four possible configurations of a 3-stage voltage amplifier.

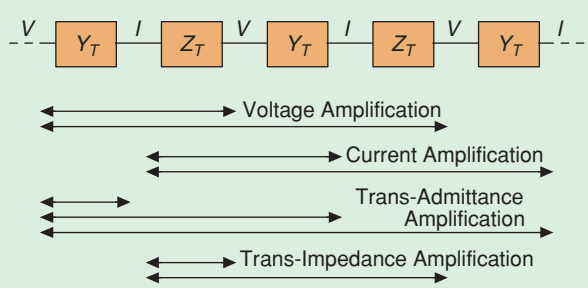

Figure 18. Alternating Y_T and Z_T blocks in cascade.

- For either of the voltage-output block types A_V and Z_T, GH is first-order inverse with Y_L (direct with Z_L). The high Z_i of a following A_V or Y_T block (which constitutes the load) maximizes GH of the first block and hence minimizes sensitivity. Other factors being constant, increasing GH of the second block actually increases (slightly) the overall gain of the first block.
- Similarly, for either of the voltage-input block types A_V and Y_T, GH is first-order inverse with Z_S. The high Y_o of a preceding A_V or Z_T block (which constitutes the source) maximizes GH.

Dual statements apply to current-output and current-input blocks.

There is conflict between blocks when this procedure is not followed. Consider the situation in which an A_V block is followed by a Z_T block in an attempt to achieve overall voltage amplification, and suppose initially that both have sufficient feedback for their separate gains to be accurately defined.

Authorized licensed use limited to: UNIVERSIDAD MAR DEL PLATA. Downloaded on December 15, 2008 at 10:28 from IEEE Xplore. Restrictions apply.

- The current into the Z_T block (and therefore the output voltage from it) is determined by its own input admittance and the known output voltage from the A_V block. From (57), Y_i is first-order dependent on the forward-path parameter y_m. Thus, even though the gains of the individual blocks are de-sensitized by feedback, their combined gain is not.
- Because the source for the Z_T block is the high Y_o of the A_V block, and because the load for the A_V block is the high Y_i of the Z_T block, GH for either block is likely to be small. The assumption of "sufficient" feedback is unlikely to be correct.

A cascade of alternating Y_T and Z_T blocks (Fig. 18) carries this mutual help to an extreme [11], to the frustration of the adage that "feedback becomes more effective as it is applied around a greater number of stages." With just a single transistor in each block it is arguably the most efficient topology for wide-band amplifiers [12], efficiency defined here as the ratio of realizable to intrinsic gain-bandwidth product—including for example transistor base resistance and Miller capacitance. Increasing the feedback around one stage increases both the loop gain and overall gain of adjacent stages. The topology is interesting too in that any of the four transfer functions A_V, A_I, Y_T and Z_T can be realized by taking an appropriate section from the cascade.

Inside a cascade, the output voltage (or current) from one block is the input voltage (or current) to the next—not the equivalent generator inside its source. The considerations of Sect. III.C (or its dual) apply: gain of the second and subsequent blocks should be evaluated as if Z_S (or Y_S) were zero.

This raises the question of stability with altered Z_S (or Y_S). The answer is that poles belong to a system as a whole, and are not properties of its component parts in isolation. Thus, the condition under which the output impedance of one block (considered as the source impedance for the following block) provokes instability is identically the condition under which the input impedance of that second block (considered as the load on the first) provokes instability. It is therefore sufficient to check stability of each block when it sees the following block as load. Indeed, for a many-block amplifier it is sufficient in principle to check just the stability of any one block, *provided all calculations of output impedance and input impedance of adjacent blocks (which constitute the source and load for the block concerned) are carried through without approximation of any kind!*

VII. Conclusions

This paper presents a teaching methodology for feedback amplifiers that is both intuitive and precise. It suggests the most appropriate type of feedback for a given situation. It leads to precise results for overall gain, loop gain, input impedance and output impedance, sensitivity and stability; general rules are given for the loading effects on an amplifier by a feedback network, when calculating loop gain, and specific values are included for four standard configurations. As background the methodology requires only the very basics of linear circuit theory: superposition, the Thévenin and Norton theorems, systematic nodal analysis, reciprocity. It is therefore suitable for a first course. It can be extended to advanced topics such as optimization of loop gain [13], or amplifiers having simultaneous voltage and current sensing at the output plus voltage and current subtraction at the input [14], or the related situation in which the amplifier without feedback is bilateral (Sect. V above provides the underpinnings). It leads too into relatively-advanced concepts in circuit theory, such as the final paragraph of Sect. VI.

In contrast, the ubiquitous "divide by unity-plus-loop-gain" methodology lacks internal consistency and can lead to absurd results. This Author believes it should be abandoned.

Appendix: The Subtraction Process

To parody Handel [15] and risk making the plain places rough and the straight crooked, consider the implications of including drain resistance r_d in the FETs of Fig. 16.

Elementary feedback theory is predicated on the assumption that the subtraction process is ideal. This is valid for current subtraction which takes place at a node as in Figs. 12 and 14, but voltage subtraction (Figs. 11 and 13) is around a loop and relies on the common-mode rejecting properties of the subtractor circuit. In Fig. 5 for example, the assumption of ideal subtraction is invalidated by unbalance between sides of the differential pair.

Current sensing at the output involves a related problem.

For an imperfect subtractor in Fig. 1 we can write

$$\begin{aligned}\text{ERROR} = {} & (\text{INPUT} - \text{FEEDBACK}) \\ & + \lambda(\text{INPUT} + \text{FEEDBACK})\end{aligned} \tag{65}$$

where λ is the common-mode rejection ratio. Equation (1) then applies if G and H are replaced by

$$G_{\text{eff}} = G(1+\lambda), \tag{66}$$

$$H_{\text{eff}} = H\left(\frac{1-\lambda}{1+\lambda}\right). \tag{67}$$

In arrangements like Fig. 16, where the input is applied to the FET gate but the feedback to its source, λ is intrinsically non-zero because

Authorized licensed use limited to: UNIVERSIDAD MAR DEL PLATA. Downloaded on December 15, 2008 at 10:28 from IEEE Xplore. Restrictions apply.

$$i_{D1} = \left[\frac{g_{m1}r_{d1}}{r_{d1} + R_{D1} + (g_{m1}r_{d1} + 1)(R_{F1}||R_{F2})}\right] v_i$$

whereas

$$i_{D1} = \left[\frac{g_{m1}r_{d1} + 1}{r_{d1} + R_{D1} + (g_{m1}r_{d1} + 1)(R_{F1}||R_{F2})}\right] v_f.$$

Thus

$$\lambda = -\frac{1}{2g_{m1}r_{d1} + 1}$$

and

$$H_{\text{eff}} = \left(\frac{R_{F1}}{R_{F1} + R_{F2}}\right)\left(\frac{g_{m1}r_{d1} + 1}{g_{m1}r_{d1}}\right). \qquad (68)$$

It is reassuring that, if $g_{m2} \Rightarrow \infty$ so that $i_{D1} \Rightarrow 0$ and $GH \Rightarrow \infty$, overall voltage gain v_o/v_S does in fact approach the reciprocal of H_{eff} as given in (68): the voltages at the gate and source of the first FET are not quite equal, the currents in g_{m1} and r_{d1} are finite but equal and opposite.

The implications of r_{d1} on loading, hence on G and GH, are yet to be considered. All of which is becoming rather complicated, easy to make mistakes. When a precise result for a circuit is required, systematic nodal analysis is safe but, except in elementary cases, involves enormous algebraic effort and gives no physical insight. The beauty of the feedback approach is that, if demanded gain $1/H$ can be found precisely via intuitive reasoning, then any approximation (or mistake!) in G becomes a higher-order approximation in A. Thus, the designer can tailor the approximation to suit particular circumstances, to suit the purpose of any analysis. Subtleties like imperfection in the subtractor can almost always be ignored when estimating G. The forward-leakage contribution can usually be neglected at low frequencies, but perhaps not at the highest frequencies and particularly when Miller compensation is involved. The unilateral approximation for the amplifier without feedback is in a similar vein. Even the input and output loading terms can sometimes be omitted. For Fig. 16, if H of (64) is replaced by H_{eff} of (68) but the approximate G of (63) is retained, the resulting A is very close to precise.

Engineering design has aptly been described as "the art of making approximations." Feedback amplifier design can be a good illustration.

Acknowledgment

There is nothing new in this paper. Rather, it is a consolidated presentation of a methodology that has developed over 45 years teaching. "Students" (if that is the right word) have ranged from raw undergraduates (as at Monash University) to highly-competent professionals (as at Bell Telephone Laboratories). To all my students and colleagues I express my appreciation; understanding comes through questions and discussion.

References

[1] H.W. Bode, "Network Analysis and Feedback Amplifier Design," Princeton N.J.: van Nostrand, 1948.

[2] J. Millman and A. Grabel, "Microelectronics," 2nd. ed., New York: McGraw-Hill, 1987.

[3] M.N. Horenstein, "Microelectronic Circuits and Devices," 2nd. ed., New York: Prentice Hall, 1996.

[4] A.S. Sedra and K.C. Smith, "Microelectronic Circuits," 4th. ed., New York: Oxford Uni. Press, 1998.

[5] E.M. Cherry, "Estimates of nonlinear distortion in feedback amplifiers," *J. Audio Eng. Soc.*, vol. 48, pp. 299–313, Apr. 2000.

[6] R.D. Thornton, C.L. Searle, D.O. Pederson, R.D. Adler , and E.J. Angelo, "Multistage Transistor Circuits," (S.E.E.C. vol. 5), New York: Wiley, 1965.

[7] P.E. Gray and C.L. Searle, "Electronic Principles, Physics, Models, and Circuits," New York: Wiley, 1969.

[8] J.L.R. Marrero, "Simplified analysis of feedback amplifiers," *I.E.E.E. Trans. Education*, vol. 48, pp. 53–59, Feb. 2005.

[9] E.M. Cherry, "Input and output impedance of feedback amplifiers," *Proc. Inst. Elec. Engrs. Pt.G, Ccts. & Systs.*, vol. 143-G, pp. 195–201, Aug. 1996.

[10] E.M. Cherry and D.E. Hooper, "Amplifying Devices and Low-Pass Amplifier Design," New York: Wiley, 1968.

[11] E.M. Cherry, "An engineering approach to the design of transistor feedback amplifiers," *Proc. Inst. Radio Engrs. Aust.*, vol. 22, pp. 303–320, May 1961. Republished *J. Brit. Inst. Radio Engrs.*, vol. 25, pp. 127–144, Feb. 1963. See also *ibid*, vol. 27, pp. 349–352, May 1964.

[12] E.M. Cherry and D.E. Hooper, "The design of wide-band transistor feedback amplifiers," *Proc. Inst. Elec. Engrs. (London) Pt.B*, vol. 110-B, pp. 375–389, Feb. 1963.

[13] E.M. Cherry, "Feedback amplifier configurations," *Proc. Inst. Elec. Engrs. Pt.G, Ccts., Devices & Systs.*, vol. 147-G, pp. 334–346, Dec. 2000.

[14] E.M. Cherry, "Feedback Amplifiers and the Complex Frequency Plane," book in preparation, expected completion 2008.

[15] G.F. Handel, "The Messiah," London: Walsh, 1741.

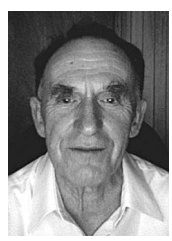

Edward M. Cherry received the B.Sc. and M.Sc. from the University of Melbourne, Australia, in 1957 and 1959 respectively, and the Ph.D. in electrical engineering in 1962. For 1963–65 he was at Bell Telephone Laboratories, Murray Hill, for 1965–66 he was at the U.K. Atomic Energy Authority, Harwell, and in 1966 he was appointed to Monash University. For a sabbatical in 1973 he returned to Bell Laboratories, for 1994 he was with Tektronix Inc., Beaverton, Oregon, and for 1997 he was Visiting Professor at Luleå Technical University, Sweden. Dr Cherry retired from Monash University in 1999. In retirement he accepted a 5-year part-time appointment 1999–2003 with Maxim Integrated Products, Hillsboro, Oregon. Dr Cherry's interest is in analog circuits. He has published two books, more than 50 full-length papers in refereed journals, and a quantity of letters and other articles. He is a Fellow of both the Institution of Electrical Engineers and the Institution of Radio and Electronics Engineers, and has twice been awarded the latter's annual medal for the most meritorious paper published in Proceedings.

Authorized licensed use limited to: UNIVERSIDAD MAR DEL PLATA. Downloaded on December 15, 2008 at 10:28 from IEEE Xplore. Restrictions apply.